KV310FP
KSWV310FP

3-PC Stainless Steel Ball Valve
Full Port, 1000 WOG (Threaded & Socket Weld)

MERIT BRASS

DESIGN FEATURES:

- Blow-out Proof Stem
- Pressure Balance Hole in Ball Slot
- Various Thread Standards Available
- Casting Approved by TÜV AD 2000 - Merkblatt W0

APPLICABLE STANDARDS:

- Design : ASME B16.34, MSS SP-110
- Wall Thickness : EN 12516 - 3
- Pipe Thread KV310FP: ASME B1.20.1
- Socket Weld KSWV310FP: ASME B16.11
- Inspection & Testing: MSS SP-110

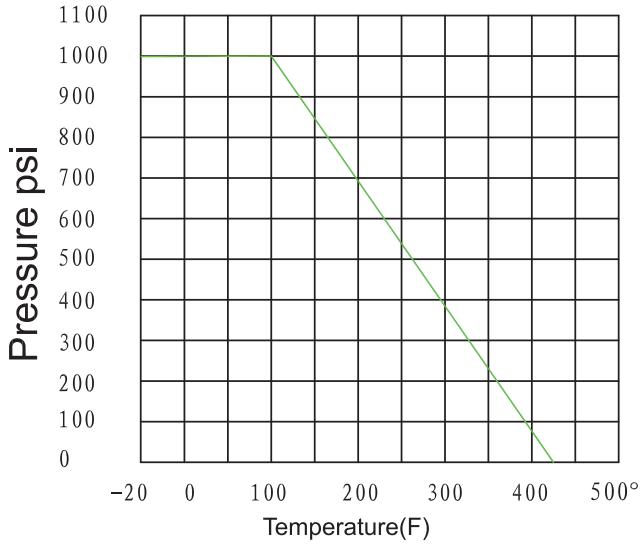

Cv, Weights & Port

Size	Cv	Wt (Lbs)	Port
1/4"	N/A	1.08	0.42
3/8"	N/A	0.99	0.50
1/2"	18	1.08	0.59
3/4"	36	1.70	0.79
1"	48	2.69	0.98
1-1/4"	72	4.10	1.26
1-1/2"	120	5.80	1.50
2"	190	8.94	1.97
2-1/2"	450	17.03	2.50
3"	600	25.15	2.99

KV310FP
Threaded

Size	Cv	Wt (Lbs)	Port
1/4"	N/A	1.02	0.42
3/8"	N/A	1.10	0.50
1/2"	18	1.39	0.59
3/4"	36	1.68	0.79
1"	48	2.60	0.98
1-1/4"	72	4.06	1.26
1-1/2"	120	5.85	1.50
2"	190	8.43	1.97
2-1/2"	450	17.83	2.50
3"	600	23.52	2.99

KSWV310FP
Socket Weld

Torque (in-lbs)

Size	Torque
1/4"	40
3/8"	40
1/2"	44
3/4"	53
1"	89
1-1/4"	115
1-1/2"	168
2"	252
2-1/2"	398
3"	637

Headquarters:
One Merit Drive
PO Box 43127
Cleveland, OH 44143
Tel: 216.261.9800
Toll Free Tel: 800.726.9800
Toll Free Fax: 855.MBFAXIT (623.2948)
Email: mbsales@meritbrass.com
Websites: www.meritbrass.com
www.MBWebXpress.com

© Merit Brass Company. All Rights Reserved.

KV310FP
KSWV310FP

3-PC Stainless Steel Ball Valve
Full Port, 1000 WOG (Threaded & Socket Weld)

MERIT BRASS

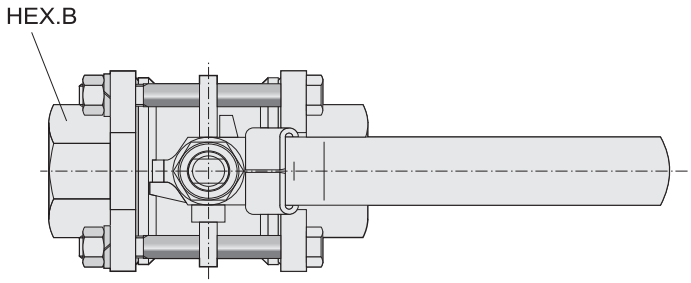

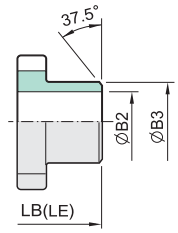

LB (Butt-welding End)
LE (Extended Butt-welding End)

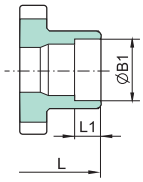

SOCKET WELD END

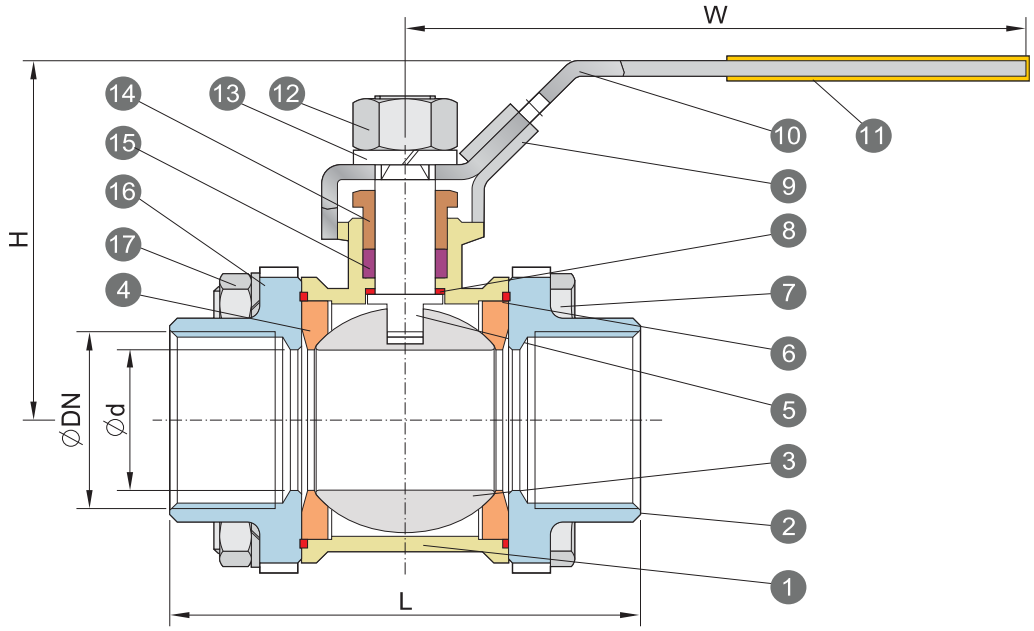

NO.	PART NAME	MATERIALS		
1	Body	CF8M	CF8	WVB
2	Cap (Thread)	CF8M	CF8	WCB
	Cap (Welding)	CF3M		
3	Ball	CF8M	CF8	
4	Ball Seat	PTFE		
5	Stem	SUS 316	SUS 304	
6	Body Gasket	PTFE		
7	Bolt	A193-B8		
8	Thrust Washer	PTFE		
9	Locking Device	SUS 304		

NO.	PART NAME	MATERIALS
10	Lever	SUS 304
11	Lever Sleeve	Vinyl Plastic
12	Stem Nut	A194-8
13	Stem Washer	SUS 304
14	Gland Nut	SUS 304
15	V-Ring Packing	PTFE
16	Bolt Washer	SUS 304
17	Bolt Nut	A194-8

Unit : inch

SIZE	ϕd	L	LB	LE	H	W	L1	ϕ B1	ϕ B2	ϕ B3	HEX.B	ϕDN
1/4"	0.42	2.57	2.57	6.50	2.26	3.94	0.39	0.56	0.37	0.71	0.93	NPT
3/8"	0.50	2.57	2.57	6.50	2.26	3.94	0.39	0.67	0.49	0.71	0.93	
1/2"	0.59	2.74	2.95	6.50	2.26	3.94	0.39	0.86	0.62	0.87	1.10	
3/4"	0.79	3.15	3.54	7.48	2.48	5.08	0.51	1.07	0.82	1.10	1.36	
1"	0.98	3.54	3.94	8.50	2.97	6.14	0.51	1.34	1.05	1.34	1.65	
1-1/4"	1.26	4.33	4.33	9.02	3.19	6.14	0.63	1.69	1.38	1.69	2.05	
1-1/2"	1.50	4.72	4.92	9.49	3.70	7.19	0.63	1.93	1.61	1.97	2.30	
2"	1.97	5.51	5.91	11.50	4.11	7.19	0.67	2.42	2.07	2.40	2.81	
2-1/2"	2.50	7.28	7.48	12.99	5.16	9.92	0.67	2.91	2.47	2.99	3.41	
3"	2.99	8.07	8.66	14.02	5.47	9.92	0.67	3.54	3.07	3.62	3.98	

© Merit Brass Company. All Rights Reserved.